<1> SAFETY CHARACTERISTICS	0
<2> SIGNIFICANT CHARACTERISTICS	0
<CI> CUSTOMER INTERFACE	0

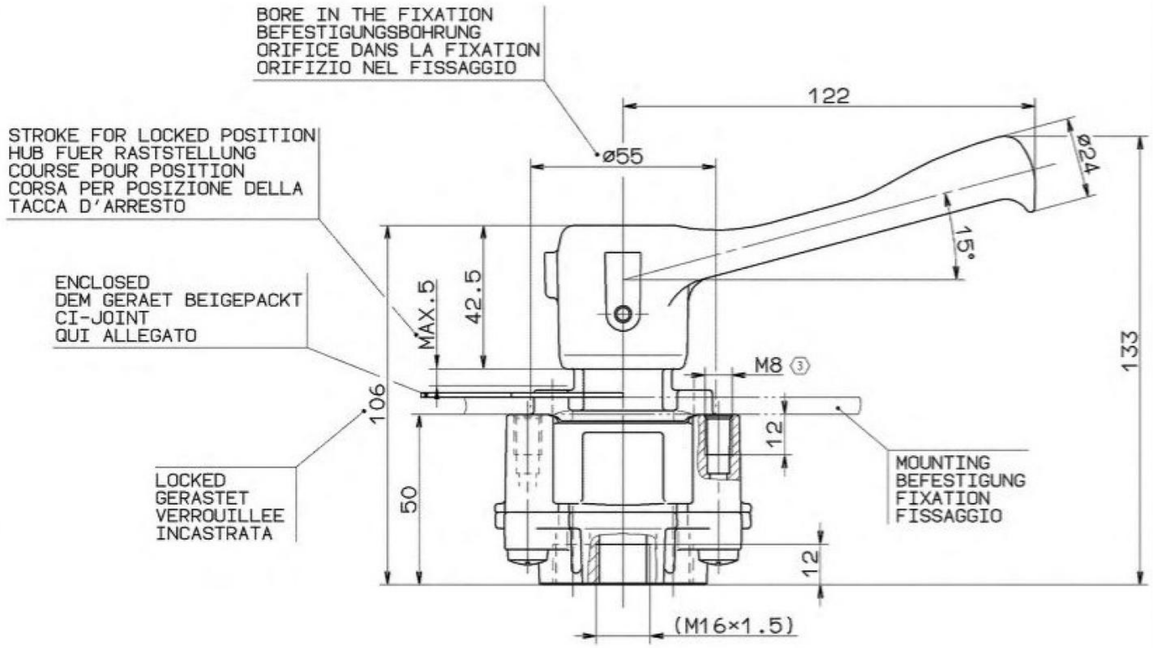

( ) ≙ AUXILIARY DIMENSION
HILFSMASS
DIMENSION AUXILIAIRE
DIMENSIONE AUSILIARIA

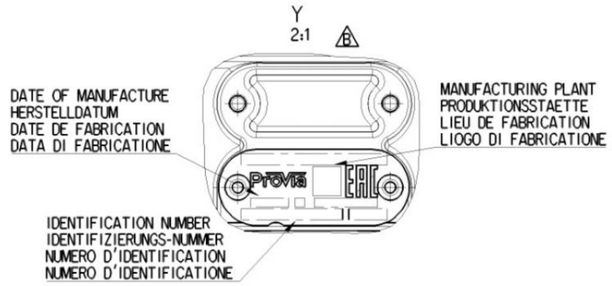

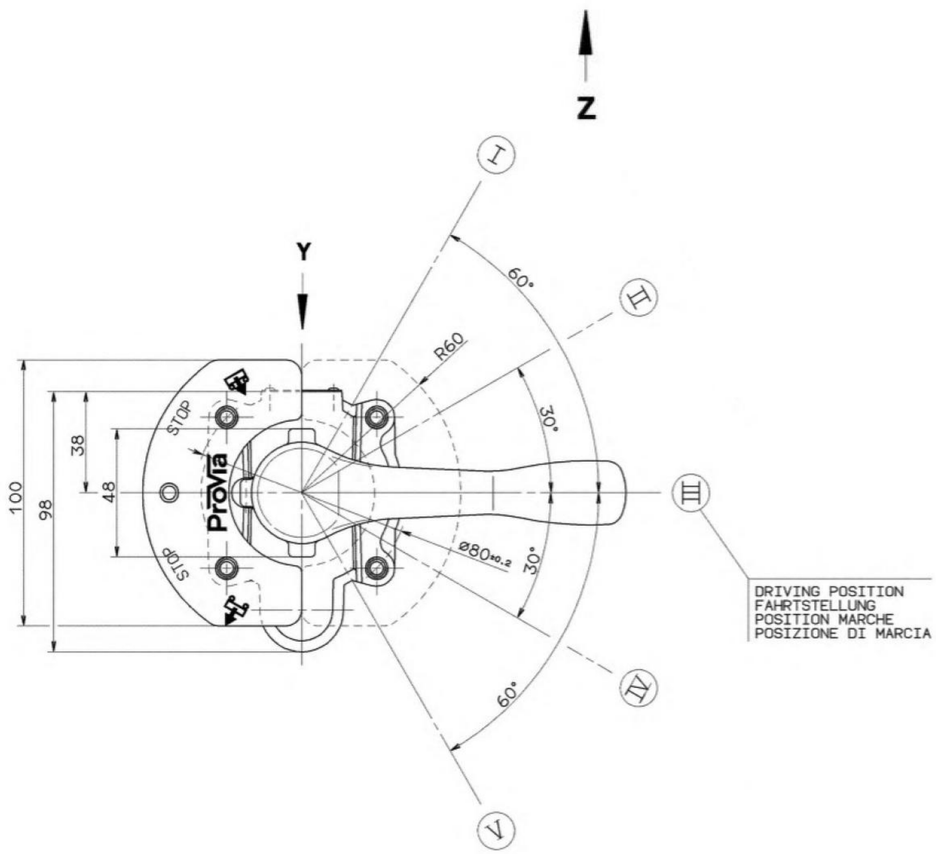

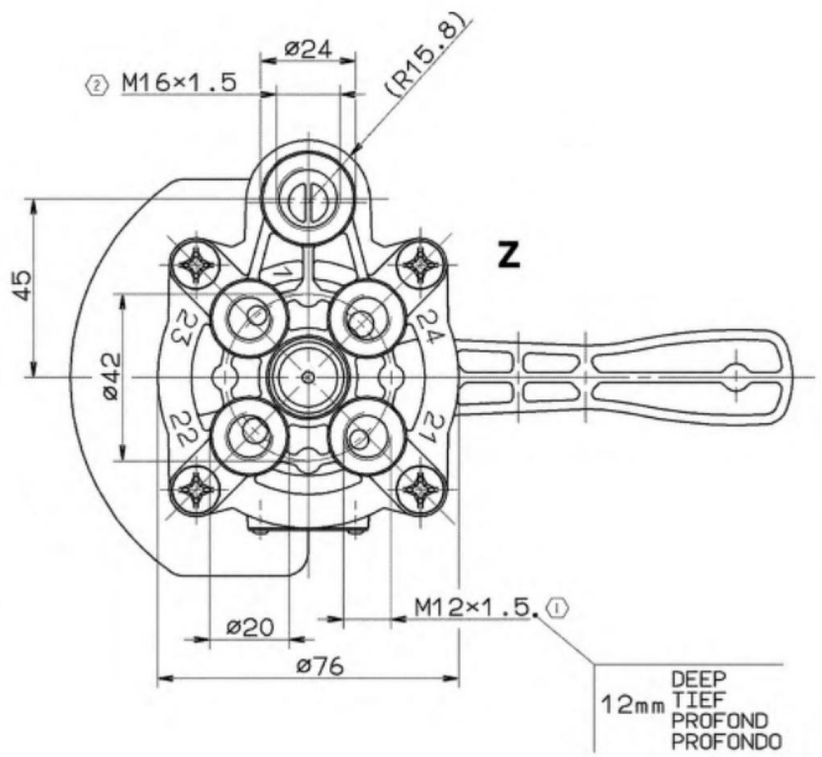

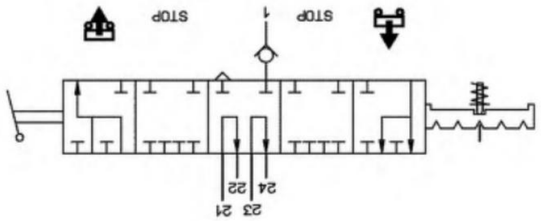

INSTALLATION POSITION EINBAULAGE POSITION D'INSTALLATION POSIZIONE DI MONTAGGIO	:	OPTIONAL BELIEBIG QUELCONQUE A SCELTA
MAX. PERMISSIBLE WORKING PRESSURE MAX. ZULAESSIGER BETRIEBSDRUCK PRESSION D'UTILIZATION MAXI ADMISSIBLE PRESSIONE DI ESERCIZIO MAX. AMMISSIBILE	:	pe = 10 bar
TORQUE ANZUGSMOMENT COUPLE DE SERRAGE COPPIA DI SERRAGGIO	:	① MAX. 25 Nm ② MAX. 34 Nm ③ MAX. 10 Nm
WORKING MEDIUM ARBEITSMEDIUM FLUIDE D'UTILISATION FLUIDO DI ESERCIZIO	:	AIR (WATER-, OIL AND ALCOHOL CONTAINING) LUFT (WASSER-, OEL UND ALKOHOLHALTIG) AIR (CHARGE D'EAU, D'HUILE ET D'ALCOOL) ARIA (ACQUOSO,OLEIFERO E ALCOOLOSO)
WORKING ENVIRONMENT UMGEBUNGSMEDIUM FLUIDE AMBIANTE FLUIDO AMBIENTE	:	AIR (WATER- AND SALT CONTAINING) LUFT (WASSER- UND SALZHALTIG) AIR (CHARGE D'EAU DE SEL) ARIA (ACQUOSO E SALIFERO)
THERMAL RANGE OF APPLICATION THERM. ANWENDUNGSBEREICH GAMME D'APPLICATION THERMIQUE CAMPO DI APPLICAZIONE TERMICA	:	- 40° ...+ 80° C
MIN. FLOW PASSAGE /NOMINAL DIAMETER MIN. DURCHFLUSSOEFFNUNG /NENNWEITE MIN. ORIFICE CALIBRE /DIAMETRE NOMINAL MIN. PASSAGGIO LIBERO /DIAMETRO NOMINALE	:	
PORTS 21,23 ANSCHLUESSE 21,23 ORIFICES 21,23 ORIFIZI 21,23	:	MIN.12.6 mm² (= Ø4mm)
PORTS 22,24 ANSCHLUESSE 22,24 ORIFICES 22,24 ORIFIZI 22,24	:	MIN.28.3 mm² (= Ø6mm)
PORTS 1,3 ANSCHLUESSE 1,3 ORIFICES 1,3 ORIFIZI 1,3	:	MIN.63.6 mm² (= Ø9mm)
OPERATING TORQUE DREHMOMENT ZUR BETAETIGUNG COUPLE DE COMMANDE COPPIA DI COMANDO	:	MAX. 7 Nm
1		SUPPLY ENERGIEZUFLUSS ALIMENTATION ALIMENTAZIONE
22,24		DELIVERY (TO AIR SUSPENSION BELLOW) ENERGIEABFLUSS IN DIE ARBEITSLEITUNG (ZUM LUFTFEDERBALG) UTILISATION (A COUSIIN DE SUSPENSION PNEUMATIQUE) MANDATA (PER SOFFIETTU A SOSPENSIONE PNEUMATICA)
3		EXHAUST ENTLUEFTUNG ECHAPPEMENT SCARICO
21,23		CONTROL LINE (TO LEVELLING VALVE) STEUERLEITUNG (ZUM LUFTFEDERVENTIL) LIGNE DE COMMANDE (A VALVE DE NIVELLEMENT) LINEA DI COMANDO (PER VALVOLA NIVELLATRICE)

General Specification: ISO 8015, JED-334-1, Size ISO 14405 LP			
Further Technical Data: PRO 032 020 0			
Doc. Code: 035	Sheet: 1 To 3		
General Tolerances JED-261			
Range of Nominal Dimensions (± mm)			
Class 1)	≤ 50	> 50 ≤ 180	> 180 ≤ 400	> 400	∠ ±3°
Fine	±0.5	±1	±1.5	±2	
Medium X	±1	±2	±3	±4	
Coarse	±2	±3.5	±5	±6.5	
Tapped Holes acc. ISO 4039/ JED-152					
1) Tolerance Class Applied Crossmarked					

Copyright ZF®

Date	Signature
Drawn 2023-12-05	Kaviya
Checked 2023-12-08	Pawlowski

Dimensions in mm

PróVía

ROTARY SLIDE VALVE
DREHSCHIEBERVENTIL
DISTRIBUTEUR ROTATIF
RUBINETTO A CASSETTO ROTATIVO

Mass	Scale	Material No.	Date of first issue: 2016-09-16		
1.4 kg	1:1 (2:1)	PRO 032 020 0	Doc.Code 005	Language ML	Sheet 1/1
Size A 1	CAD System CREO				

ECN-No.	Revision	Techn. Resp.	Replacement for
512757	3x B	5811_AM	-

100mm

Toute Communication ou reproduction de ce document, toute exploitation ou communication de son contenu sont interdites, sauf autorisation écrite. Tous droits de propriété industrielle réservés, notamment en matière de brevets et de modèles.
Weitergabe sowie Vervielfältigung dieser Unterlage, Verwertung und Mitteilung ihres Inhalts nicht gestattet, soweit nicht ausdrücklich zugelassen. Zuwiderhandlungen verpflichten zu Schadensersatz. Alle Rechte für den Fall der Patenterteilung oder Gebrauchsmuster-Eintragung vorbehalten.
Non è permesso consegnare a terzi o riprodurre questo documento, né utilizzare il contenuto o renderlo comunque noto a terzi senza autorizzazione. Tutti i diritti di proprietà industriale, in particolare quelli di brevetto e di modello, sono riservati.
Copying of this document and giving it to others and the use or communication of the contents thereof, are forbidden without express authority. Offenders are liable to the payment of damages. All rights are reserved in the event of the grant of patent or registration of a utility model or design. This document is the subject of copyright.
ETMa riserva ai tutti i diritti derivanti da brevetti o modelli.